HUBBELL POWER SYSTEMS — PCORE ELECTRIC

DATE	5-14-97	REV. DATE	9-18-08
MAXIMUM ALTITUDE	10000 ft [3000 m]		
NET WEIGHT	500 lb [227 kg]		
ANGLE OF INCLINATION FROM THE VERTICAL	0° TO 60°		

kV CLASS	161 kV	BIL	750 kV	Uy	146 kV
CURRENT RATING	800 AMP DRAW LEAD CONNECTION 1200 AMP BOTTOM CONN. TRANSFORMER 1600 AMP BOTTOM CONN. OIL CIRCUIT BREAKER				
MIN. CREEP	161.00 [4089.4]	MIN. STRIKE	65.00 [1651.0]		
CREEP/Uy	1.10 [28.0]	STD.	IEEE C57.19.00/01		
PCB CONTENT OF OIL IS LESS THAN 1 ppm					

DWG.	CATALOG NUMBER	GLAZE COLOR
SD	POC750B0800S	BROWN
SD	POC750G0800S	LT. GRAY

TITLE

TRANSFORMER – BREAKER INTERCHANGEABLE

SILVER PLATED BRASS TOP TERMINAL

NOTE: ACTUAL DRAW-LEAD CURRENT RATING IS DETERMINED BY CABLE SIZE

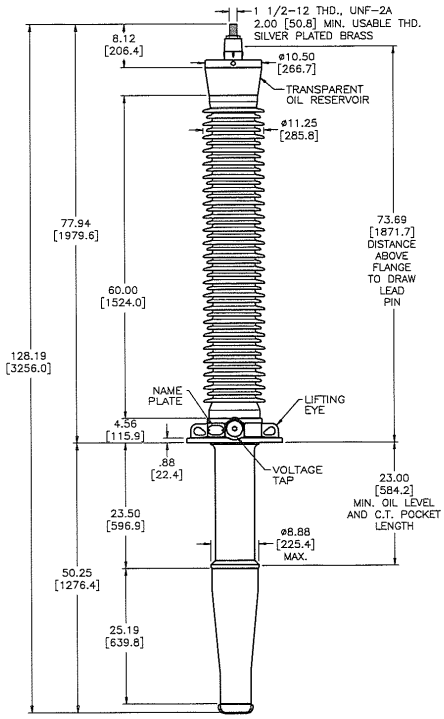

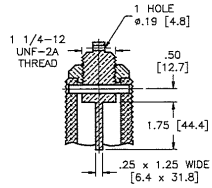

DRAW LEAD ASSEMBLY

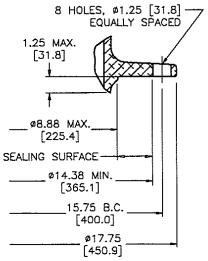

MOUNTING FLANGE

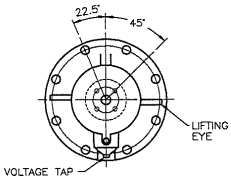

ALIGNMENT OF FLANGE AND BOTTOM TERMINAL TOP VIEW

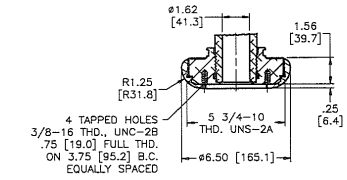

TWO PIECE BOTTOM END CAP WITH UNCOATED TRANSFORMER SHIELD

DIMENSIONS IN INCHES [MILLIMETERS]

REVISION REMOVED °C, TEMPERATURE GOVERNED BY IEEE STANDARD

SCALE 1/14

NOTE TO PURCHASER: ALL SALES OF POWER PRODUCTS ARE SUBJECT TO OUR STANDARD TERMS AND CONDITIONS AND THE LIMITED WARRANTIES THEREUNDER